3/2-way valves DN 1.6 and DN 3.0

Pilot valve for pressure actuated valve by external fluid
Indirectly solenoid actuated
Seat valves
Connection P female thread G 1/4; Connection A male thread G 1/4
Operating pressure 1 to 10 bar

84660
84670
84680
84690

Description (standard valve)

Solenoid valve for filtered, lubricated resp. non-lubricated air or neutral liquid fluids

Switching function:	normally closed
Flow direction:	determined
Fluid temperature:	–10 °C to max. +60 °C
Ambient temperature:	–10 °C to max. +60 °C
Monting position:	optional, preferably solenoid vertical on top

Material

Body:	Brass (CW617N)
Seat seal:	TPU
Internal parts:	Stainless steel, PPS

Features

- Compact design
- Complete with connector and gasket
- Interchangeable solenoid system
- Noiseless exhaust
- Low power consumption

Symbol

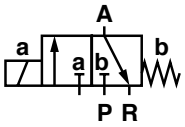

Ordering information

To order, quote model number from table overleaf, e.g. 8468000.9101 for a DN 3.0 valve.

Buschjost GmbH
Valve Technology and Systems

Detmolder Straße 256
D-32545 Bad Oeynhausen
PO Box 10 02 52-53
D-32502 Bad Oeynhausen

Phone ++49 5731/791-0
Fax ++49 5731/791-179
www.buschjost.com
mail@buschiost.com

Characteristic data

Valves

Part Number Solenoid with ⎓ or ∼	Nominal Diameter (mm)	Connection size Internal P	R	External A	Operating pressure min.	max. (bar)	Switching time ** (ms) On	Off	Flow *** (Basis l/min)	Weight (kg)
8466000.9101 8467000.9101	1.6	G 1/4 1/4 NPT	* *	G 1/4 1/4 NPT	1	10	8.5	30.4	1.2	0.47
8468000.9151 8469000.9151	3.0	G 1/4 1/4 NPT	* *	G 1/4 1/4 NPT	1	10	15.0	81.9	3.3	0.45

* Noiseless exhaust
** At 6 bar acc. to DIN VDI 3290 with DC solenoid
*** C_V-value (US) ≈ k_V-value x 1.2

State voltage [V] and frequency [Hz]

Solenoid 9101 / 9151

Standard voltages

DC ⎓	AC ∼ 50 Hz	60 Hz
24 V	24 V	–
–	110 V	120 V
–	230 V	220 V

Design acc. to DIN VDE 0580
Voltage range ±10 %
100 % duty cycle
Protection class acc. to EN 60529 IP65
Socket Form A acc. to DIN EN 175301-803 (included)

Power Consumption

According to DIN VDE 0580 at coil temperature of +20 °C. In operation the power consumption of the solenoid decreases by approx. 30 %.

Solenoid	DC ⎓	AC ∼ Inrush	Holding
9101 *	8 W	15 VA	12 VA / 7 W
9151 *	18 W	45 VA	35 VA / 17 W

* c SP us coil only maintaining the ambient temperature of +50 °C

Attention!
The conditions imposed on the Ex approvals lead to reduction of the permissible standard temperature ranges in the cases of explosion protected solenoids.

Further Options (Valves)

XXXXX**02**.XXXX Manual override

XXXXX**53**.XXXX connection P femal thread G 1/8
connection A male thread G 1/8

Further Options (Solenoids for Series 84660)

XXXXXXX.**9136** Solenoid in protection class
Ⓔx II 2 GD EEx m II T4 T 130 °C,
with 3 m connection cable

Further Options (Solenoids for Series 84680)

XXXXXXX.**9191** Solenoid in protection class
Ⓔx II 2 GD EEx me II T3 T 140 °C

On request Further versions

Section view

Solenoid 9101

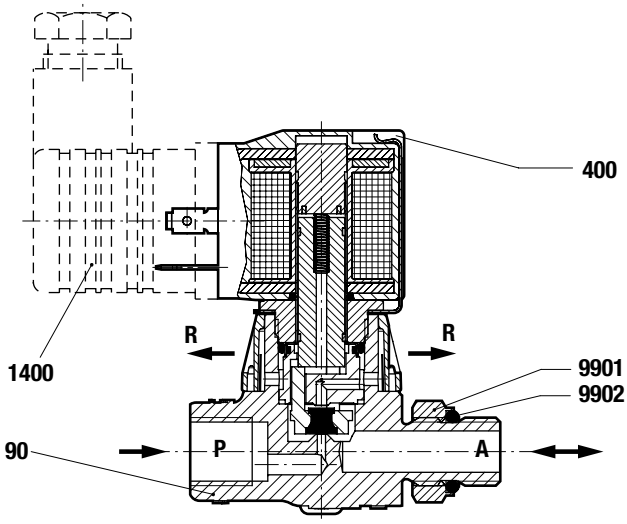

Solenoid 9151

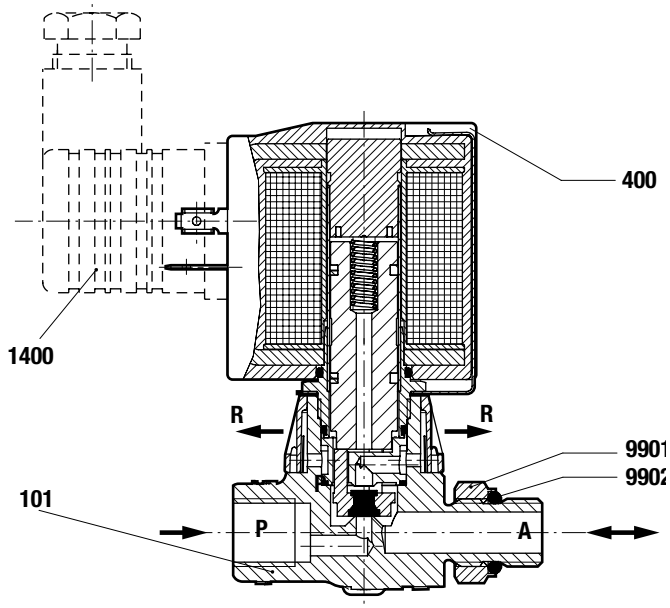

90	3/2 way valve without solenoid incl. pos. 9901 special hexagon nut and pos. 9902 O-Ring
400	Solenoid
1400	Socket (included)
9901	Special hexagon nut
9902	O-Ring

When ordering spare parts please state Cat.-No. and series No.

General Dimensions

Solenoid may be rotatable 360°
Socket turnable 4 x 90°
(Socket included)

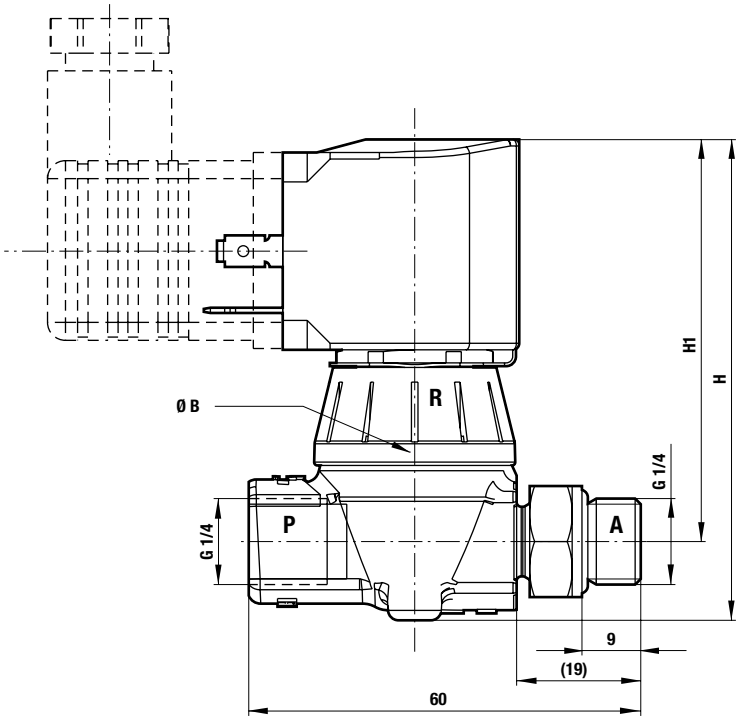

with solenoid 9101	with solenoid 9151
H = 73.6	H = 91.0
H1 = 61.5	H1 = 79.0
Ø B = 31	Ø B = 31

Note to Pressure Equipment Directive (PED):
The valves of this series are according to Art. 3 § 3 of the Pressure Equipment Directive (PED) 97/23/EG.
This means interpretation and production are in accordance to engineers practice wellknown in the member countries.
The CE-sign at the valve does not refer to the PED. Thus the declaration of comformity is not longer applicable for this directive.

Note to Electromagnetic Compatibility Guideline (EEC):
The valves shall be provided with an electrical circuit which ensures the limits of the harmoniised standards EN 61000-6-3 and EN 61000-6-1 are observed, and hence the requirements of the Electromagnetic Guildeline (2004/108/EC) satisfield.