bürkert
FLUID CONTROL SYSTEMS

2/2-Way Solenoid Control Valve

- Excellent range (1:200)
- Very good response
- Compact valve design
- Orifice sizes 2 ... 8 mm
- Port connection 3/8" and 1/2"

Type 2875 can be combined with…

Type 8605
Control Electronics, Cable plug version

Type 8605
Digital control electronics DIN-rail version

Type 2508
Cable plug

Type 8611
Universal controller

The direct-acting solenoid control valve Type 2875 is used as the regulating unit in control loops. Due to an elastomeric seat seal the valve closes tight (integrated shut-off function), up to the DN specific nominal pressure, see ordering chart on page 3. The plunger of the valve is assembled frictionless, which leads to an extraordinary adjustment characteristic. This valve is particularly suitable for demanding control tasks (high control range, dry gases, etc.).

Circuit function A

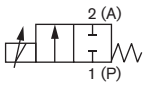

direct acting 2-way solenoid control valve, normally closed

Valve control takes place through a PWM signal [1]. The duty cycle of the PWM signal determines the coil current and hence the position of the plunger. Optionally the valve can also be driven with DC voltage.

Please note the sizing comments for such a control valve on page 2.

[1] PWM pulse width modulation
[2] Pressure data [bar]: Measured as overpressure to the atmospheric pressure, orifice further depends on nominal pressure
[3] Maximum value, value depends on operating pressure
[4] Characteristic data of control behaviour depends on process conditions
[5] by flow measurement

Technical Data - Valve	
Body material	Brass, stainless steel
Seal material	FKM, EPDM on request
Medium	Neutral gases, liquids on request
Pressure range	0 ... 25 bar [2]
Medium temperature	-10 ... +90 °C
Ambient temperature	max. +55 °C
Power supply	24 V DC
PWM frequency	900 Hz
Power consumption	16 W
Max. coil current [3]	750 mA
Duty cycle	100% continuously rated
Port connection	G 3/8, G 1/2, NPT 3/8, NPT 1/2
Electrical connection	Tag connector (DIN EN 175301-803 Form A)
Installation	As required, preferably with actuator in upright position
Typical control data [4] **at PWM-Control**	
Hysteresis	< 5%
Repeatability	< 0.5% FS [5]
Sensitivity	< 0.25% FS [5]
Span	1:200
Response time (10 -90%)	25 ms
Protection class - valve	IP65

The valve control can take place through the control electronics of Type 8605, which converts an analogue input signal into a PWM signal.

Further functional features of the Type 8605 electronic control unit:
- Temperature compensation for coil heating by internal current regulation
- Simple adaptation of zero and span settings
- Ramp function to dampen fast set point changes

DTS 1000173855 EN Version: D Status: RL (released | freigegeben | validé) printed: 24.10.2016

Characteristics of a solenoid control valve

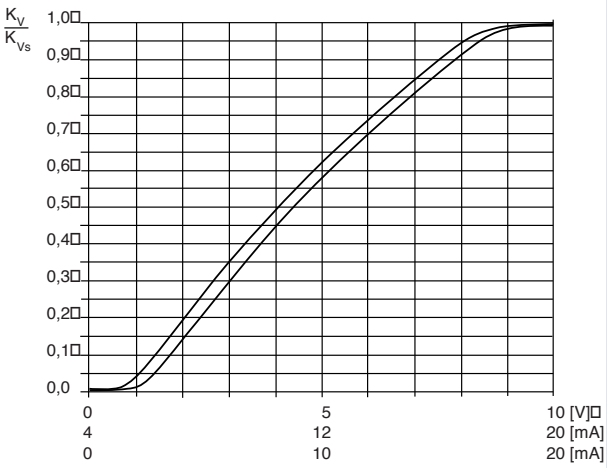

Advice for valve sizing

In continuous flow applications, the choice of an appropriate valve size is much more important than with on/off valves. The optimum size should be selected such that the resulting flow in the system is not unnecessarily reduced by the valve. However, a sufficient part of the pressure drop should be taken across the valve even when it is fully opened.

Recommended value: Δp_{valve} > 25 % of total pressure drop within the system

Otherwise, the ideal, linear valve curve characteristic is changed.

If the differential pressure (difference between inlet and outlet pressure) exceeds half the value of the nominal pressure, the characteristics may change.

For that reason take advantage of Bürkert competent engineering services during the planning phase!

Determination of the k_v value

Pressure drop	k_v value for liquids [m³/h]	k_v value for gases [m³/h]
Subcritical $p_2 > \frac{p_1}{2}$	$= Q\sqrt{\frac{\rho}{1000\,\Delta p}}$	$= \frac{Q_N}{514}\sqrt{\frac{T_1\,\rho_N}{p_2\,\Delta p}}$
Supercritical $p_2 < \frac{p_1}{2}$	$= Q\sqrt{\frac{\rho}{1000\,\Delta p}}$	$= \frac{Q_N}{257\,p_1}\sqrt{T_1\,\rho_N}$

k_V	Flow coefficient	[m³/h] [6]
Q_N	Standard flow rate	[m_N^3/h] [7]
p_1	Inlet pressure	[bar][8]
p_2	Outlet pressure	[bar][8]
Δp	Differential pressure p_1-p_2	[bar]
ρ	Density	[kg/m³]
ρ_N	Standard density	[kg/m³]
T_1	Medium temperature	[(273+t)K]

[6] measured for water , Δp =1 bar, over the value

[7] At reference conditions 1.013 bar and 0°C (273K)

[8] Absolute pressure

Dimensions [mm]

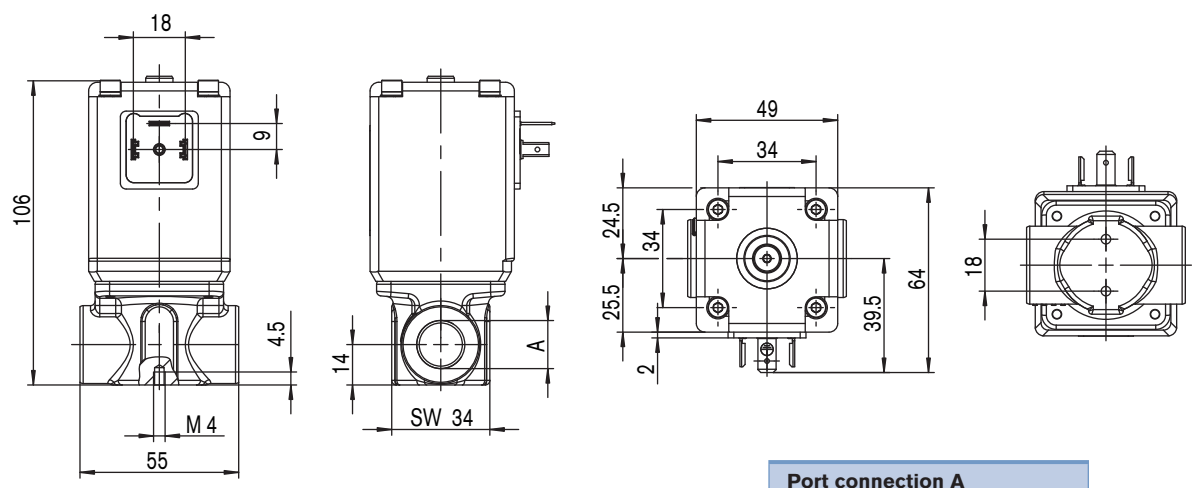

Port connection A
G 3/8, G 1/2, NPT 3/8, NPT 1/2

bürkert

Ordering chart

All valves with FKM seal

Circuit function	Orifice [mm]	Port connection	k_{Vs} value water [m³/h] [9]	Nominal pressure [10] [bar]	Max. differential pressure [bar]	Item no. brass	Item no. Stainless steel
A 2/2-way Normal closed (NC) 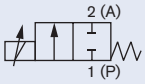	2	G 3/8	0.12	25	12.5	236 897	236 899
		NPT 3/8	0.12	25	12.5	236 898	236 900
	3	G 3/8	0.25	10	5	236 901	236 903
		NPT 3/8	0.25	10	5	236 902	236 904
	4	G 3/8	0.45	8	4	236 905	236 910
		NPT 3/8	0.45	8	4	236 908	236 912
		G 1/2	0.45	8	4	236 906	236 911
		NPT 1/2	0.45	8	4	236 909	236 913
	6	G 1/2	0.80	4	2	236 915	236 919
		NPT 1/2	0.80	4	2	236 917	236 921
	8	G 1/2	1.10	2	1	236 922	236 924
		NPT 1/2	1.10	2	1	236 923	236 925

[9] **k_{Vs} value:** Flow rate value for water, measured at +20 °C and 1 bar pressure differential over a fully opened valve.
[10] **Pressure data [bar]:** Overpressure with respect to atmospheric pressure, with a differential pressure (difference between inlet and outlet pressure) above half of the nominal pressure there are discontinuities in the valve's characteristics possible.

Note: Please note that the valves are delivered without control electronics,Type 8605, and cable plug (see ordering chart for accessories).

Ordering chart - variants with approvals

All valves with FKM seal

Circuit function	Orifice [mm]	Approvals [11]	Port connection [12]	k_{vs} value water [m³/h]	Nominal pressure [bar]	Max. differential pressure [bar]	Item no. brass	Item no. Stainless steel
A 2/2-way Normal closed (NC) 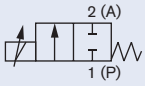	2	UR	G 3/8	0.12	25	12.5	274 976	274 988
			NPT 3/8	0.12	25	12.5	274 977	274 989
		DVGW	G 3/8	0.12	25	12.5	275 052	on request
		ATEX / IECEx	G 3/8	0.12	25	12.5	276 549	on request
	3	UR	G 3/8	0.25	10	5	274 978	274 990
			NPT 3/8	0.25	10	5	274 979	274 991
		DVGW	G 3/8	0.25	10	5	275 053	on request
		ATEX / IECEx	G 3/8	0.25	10	5	276 550	on request
	4	UR	G 3/8	0.45	8	4	274 980	274 992
			NPT 3/8	0.45	8	4	274 981	274 993
		DVGW	G 3/8	0.45	8	4	275 054	on request
		ATEX / IECEx	G 3/8	0.45	8	4	276 553	on request
		UR	G 1/2	0.45	8	4	274 982	274 994
			NPT 1/2	0.45	8	4	274 983	274 995
	6	UR	G 1/2	0.80	4	2	274 984	274 996
			NPT 1/2	0.80	4	2	274 985	274 997
		DVGW	G 1/2	0.80	4	2	275 056	on request
		ATEX / IECEx	G 1/2	0.80	4	2	276 555	on request
	8	UR	G 1/2	1.10	2	1	274 986	274 998
			NPT 1/2	1.10	2	1	274 987	274 999
		DVGW	G 1/2	1.10	2	1	275 057	on request
		ATEX / IECEx	G 1/2	1.10	2	1	276 556	on request

[11] **Approvals:** UR (UL recognized)
DVGW - Approval acc. to the European gas device guidelines (DIN 3394-1)
ATEX - II 2 G EEx m II T4 or T6
IECEx - Ex e mb IIC T6 Gb
[12] **Port connections:** Others on request.

Ordering chart - variants for higher differential pressure

All valves with FKM seal

Circuit function	Orifice [mm]	Approvals [11]	Port connection [12]	k_{vs} value water [m³/h]	Nominal pressure [bar]	Item no. brass	Item no. Stainless steel
A 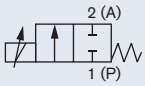	2.0		G 3/8	0.12	25	239 040	239 085
		UR	G 3/8	0.12	25	275 000	275 005
		ATEX / IECEx	G 3/8	0.12	25	274 877	on request
	3.0		G 3/8	0.25	10	239 086	239 087
		UR	G 3/8	0.25	10	275 001	275 006
		ATEX / IECEx	G 3/8	0.25	10	274 878	on request
	4.0		G 3/8	0.45	8	239 088	239 089
		UR	G 3/8	0.45	8	274 090	274 091
		ATEX / IECEx	G 3/8	0.45	8	274 879	on request
	6.0		G 1/2	0.80	4	239 090	239 091
		UR	G 1/2	0.80	4	275 002	275 007
		ATEX / IECEx	G 1/2	0.80	4	274 880	on request
	8.0		G 1/2	1.10	2	239 092	239 093
		UR	G 1/2	1.10	2	275 004	275 008
		ATEX / IECEx	G 1/2	1.10	2	274 881	on request

Note: The following technical data changes compared with the data on page 1
- PWM frequency 500 Hz, span 1:100.
- Other connection variations (sub-base, NPT) on request

Ordering chart for accessories

Cable plug 2508 acc. to DIN EN 175301-803 Form A

The delivery of a cable plug includes the flat seal and fixing screw

Circuitry	Voltage / frequency	Item no.
None	0 - 250 V AC/DC	008 376
None, with 3 m cable	0 - 250 V AC/DC	783 573

Control elecronics, Type 8605 - please see datasheet

Further versions on request

Material
EPDM

Analytical
Oxygen version Parts oil-, fat- and silicon free

Approvals
UR (UL recognized)
DVGW/ Gas device guidelines
ATEX / IECEx

Port connection
flange connections

bürkert

Note
You can fill out the fields directly in the PDF file before printing out the form.

Design data for solenoid control valves

Please fill out this form and send to your local Bürkert Sales Centre* with your inquiry or order

Company	Contact person
Customer No	Department
Address	Tel./Fax
Postcode/Town	E-mail

= Mandatory fields **Quantity** **Requested delivery date**

Process data

Medium				
State of medium		☐ **liquid**	☐ **gaseous**	
Medium temperature			°C	
Maximum flow rate	Q_{nom} =		Unit:	
Minimum flow rate	Q_{min} =		Unit:	
Inlet pressure at nominal operation	p_1=		barg	
Outlet pressure at nominal operation	p_2=		barg	
Max. inlet pressure (nominal pressure)	p_{1max}=		barg	
Ambient temperature			°C	

Additional specifications

Body material	☐ Brass	☐ Stainless steel
Seal material	☐ FKM	☐ other

Note: Please state all pressure values as **overpressures with respect to atmospheric pressure** [barg].

Standard series of solenoid control valves

Type 2871
Orifice 0.05 to 2mm
20mm coil width

Type 2873
Orifice 0.8 to 4mm
32mm coil width

Type 2875
Orifice 2 to 8mm
49mm coil width

To find your nearest Bürkert facility, click on the orange → www.burkert.com

Reset Form

In case of special application conditions, please consult for advice.

Subject to alteration.

DTS 1000173855 EN Version: D Status: RL (released | freigegeben | validé) printed: 24.10.2016